E7/FRE2 V17

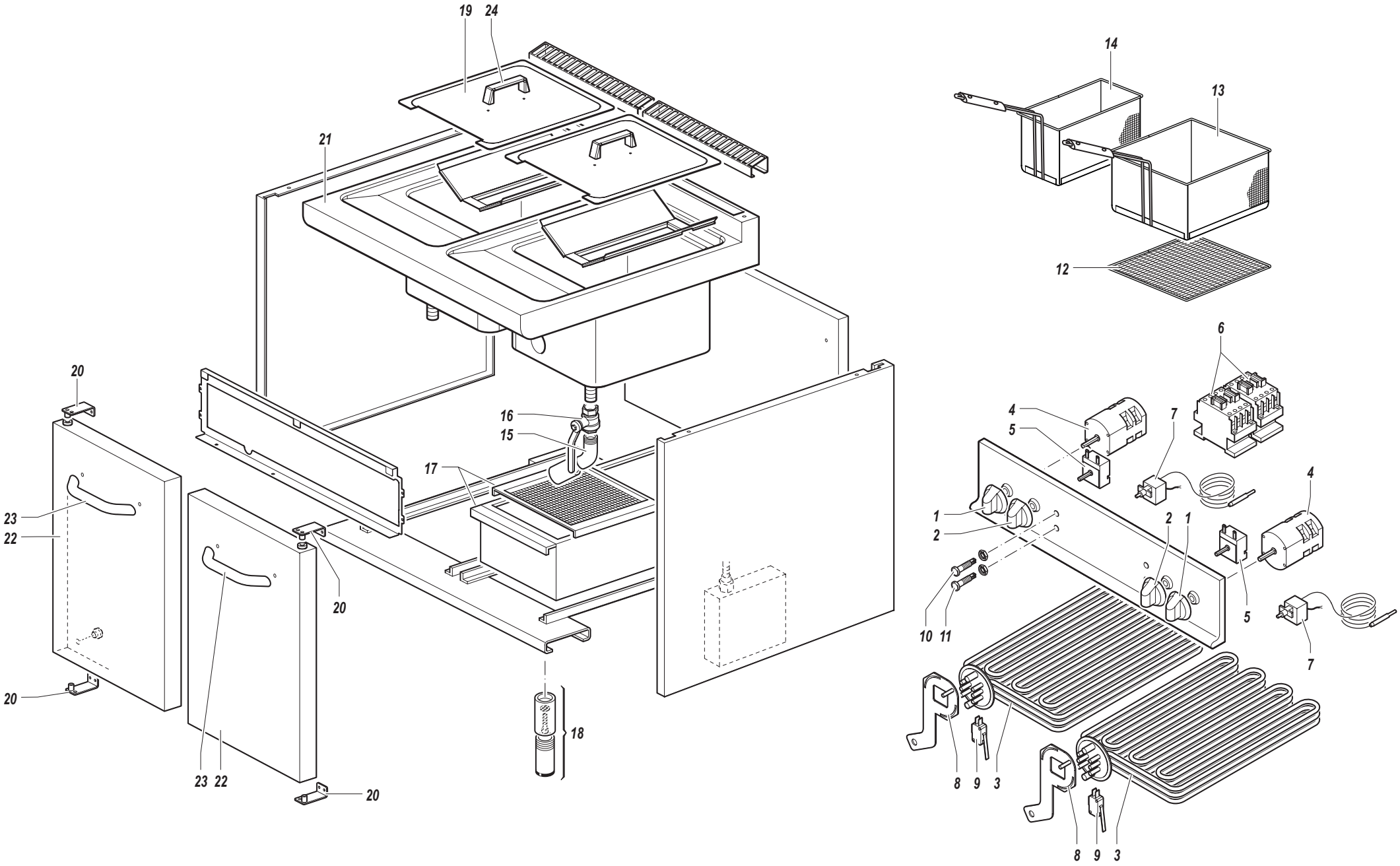
19
24
21
20
16
15
17
23
22
20
20
23
22
20
18
14
13
12
6
4
5
7
4
1
2
2
1
10
11
5
7
8
9
3
8
9
3

RIF.	CODICE	R.C.	DENOMINAZIONE	DESCRIPTION	BESCHREIBUNG	DESIGNATION	DENOMINACIONES
1	29/99901039		MANOPOLA	KNOB	GRIFF	POIGNEE	POMO
2	29/99901129		MANOPOLA	KNOB	GRIFF	POIGNEE	POMO
3	07/99600069		RESISTENZA	RESISTOR	RESISTOR	RESISTANCE	RESISTOR
4	10/99900160		INTERRUTTORE GENERALE	SWITCH	SCHALTER	INTERRUPTEUR	INTERRUPTOR
5	08/99600050		TERMOSTATO DI LAVORO	THERMOSTAT	THERMOSTAT	THERMOSTAT	TERMOSTATO
6	10/16520200	*	TELERUTTORE	REMOTE CONTROL SWITCH	FERNSCHALTER	TÉLÉRUPTEUR	TELERRUPTOR
7	08/99600040	*	TERMOSTATO DI SICUREZZA	THERMOSTAT	THERMOSTAT	THERMOSTAT	TERMOSTATO
8	10/99600002		LEVA	LEVER	HEBEL	LEVIER	PALANCA
9	10/99600001		MICROINTERRUTTORE	MICROSWITCH	MIKROSCHALTER	MICRO-INTERRUPTEUR	MICROINTERRUPTOR
10	14/99901629		SPIA ARANCIONE	PILOT LIGHT	KONTROLLAMPE	LAMPE TEMOIN	INDICADOR
11	14/99901619		SPIA BIANCA	PILOT LIGHT	KONTROLLAMPE	LAMPE TEMOIN	INDICADOR
12	21/99600142		GRIGLIA FERMA SCORIE	GRATE	GITTERROST	GRILLAGE	ENREJADO
13	21/99600133	*	CESTELLO GRANDE	BASCKET	KORB	PANIER	CESTA
14	21/99600134	*	CESTELLO PICCOLO	BASCKET	KORB	PANIER	CESTA
15	13/99900001		RACCORDO A 45°	PIPE FITTING	ROHRVERBINDUNG	RACCORD DE TUYAU	CONEXIÓN
16	14/99700024		RUBINETTO A SFERA ACQUA	TAP	HAHN	ROBINET	GRIFO
17	WD/99600001		BACINELLA RACCOGLIOLIO E TELAIO FILTRO OLIO	OIL TRAY AND OIL FILTER BOWL	TABLETT UND ÖLFILTERGEHÄUSE	CUVE ET BATI FILTRE HUILE	BANDEJA Y CAJA FILTRE ACEITE
18	15/99901801		PIEDINO REGOLABILE	ADJUSTABLE FOOT	EINSTELLBARER FUSS	PIED REGLABLE	PIE REGULABLE
19	23/99601180		COPERCHIO	COVER	DECKEL	COUVERCLE	TAPA
20	23/99600400		CERNIERA PORTA	HINGE	SCHARNIER	CHARNIERE	BISAGRA
21	WD/99603879		PIANO COMPLETO DI VASCA	BASIN	BECKEN	CUVE	CUBA
22	WP/99600060		PORTA	DOOR	TÜR	PORTE	PUERTA
23	15/99900499		MANIGLIA PORTA ARMADIO	HANDLE	HANDGRIFF	POIGNEE	MANIJA
24	15/99900510		MANIGLIA COPERCHIO NERA	HANDLE	HANDGRIFF	POIGNEE	MANIJA

* PRIMA DOTAZIONE DI RICAMBI CONSIGLIATI • FIRST RECOMMENDED SPARE PARTS LIST • ERSTE AUSRÜSTUNG ANGERATENER ERSATZTEILEN • PREMIERE DOTATION PIECES DETACHEES RECOMMANDEES • PRIMERA DOTACION DE REPUESTOS ACONSEJADOS